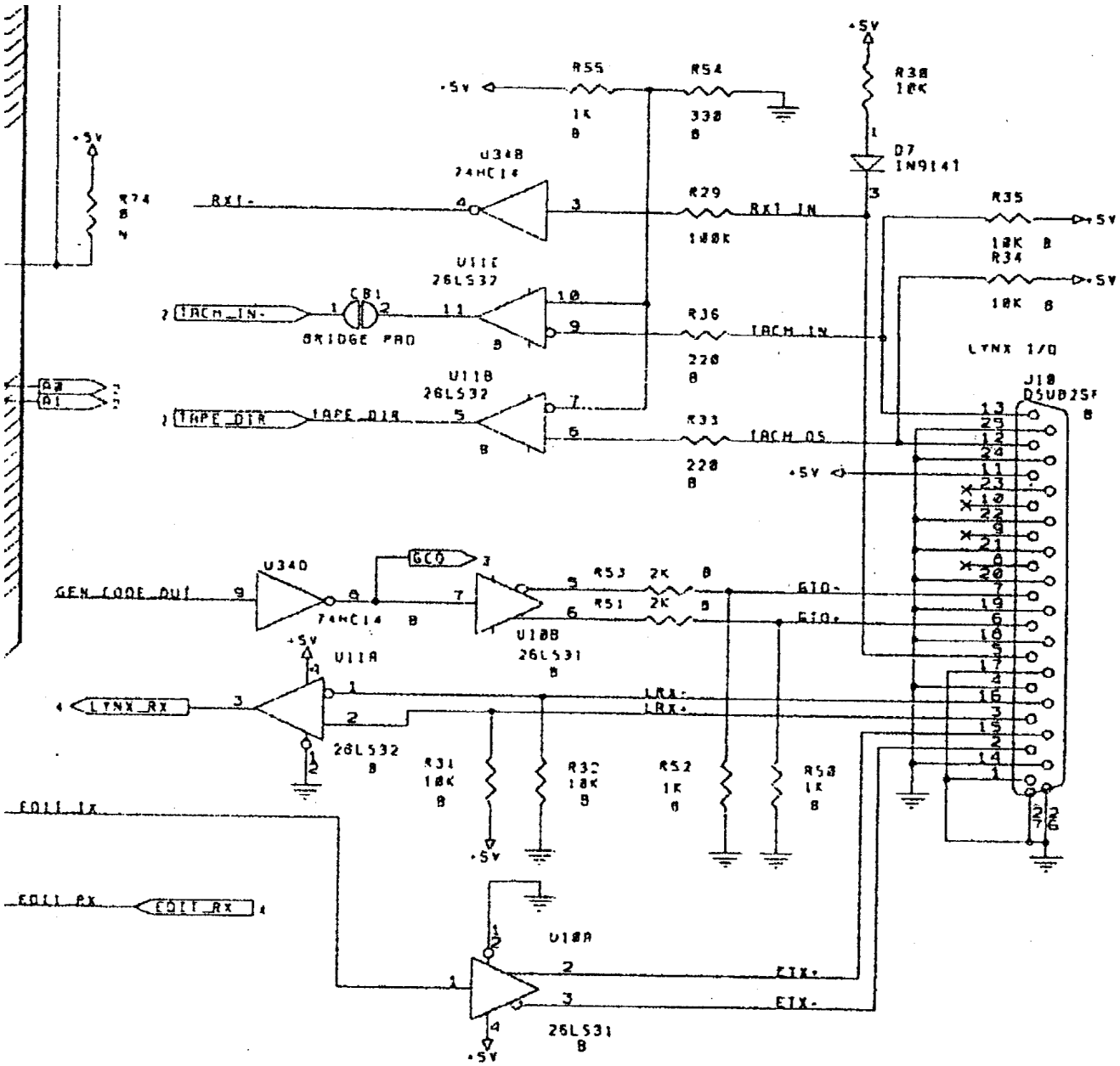

AI-2 Schematic Extraction – Microlynx I/O Port